Fig. 35 (Rev. 11/15) (Concluded)
(New 10/81)

PANEL PRODUCTS, UNCOATED, 6 FT LONG AND OVER—BULKHEAD FLATCARS

Item	No. of Pcs.	Description
E	As required.	Vertical filler: to be positioned to fill void at centermost part of load. Void 12 in. or under may be filled with upright sheets of particleboard and two inflatable dunnage bags (see Note 3). When total void exceeds 12 in., centermost void may be reduced by sheets of particleboard secured to bulkhead by 1 1 /4 in. × .029 in. bands and/or by one pile loaded crosswise. Crosswise pile, when used, to be completely encircled by two 1 1/4 in. × .029 in. high tension bands.
F	2 per pile 8 ft long or less. Add one for each additional 4 ft or less. 2 per pile 4 ft wide or less, if loaded crosswise	Securement bands: 1 1/4 in. × .029 in. high tension bands. Secure to lading strap anchors, stake pockets or constant tensioning devices if car is so equipped. Crosswise packages less than 4 ft wide must be unitized together by two 1 1/4 in. × .029 in. high tension bands. Crosswise packages must be of uniform length and width.
Alternate Item D		
Alt D	2 per each outside top package.	Encircling bands: 1 1/4 in. × .029 in. high tension bands. Encircle all side-by-side packages in a pile and locate approximately 24 in. from ends of packages. May be substituted for Item D unitizing bands only when load is three tiers high or less. Not shown on drawing.
Alternate Item F		
Alt F	2 per pile 8 ft long or less. Add one for each additional 4 ft or less. 1 per pile 4 ft wide or less, if loaded crosswise	Web tie-down assemblies: polyester webbing 4 in. wide with a minimum breaking strength of 20,000 lb. See General Rule 20 of Section 1.

Notes and Additional Requirements:

1. Height of load not to exceed height of bulkheads.
2. Deck of flatcars must be free of debris, snow, and ice before loading.
3. Disposable pneumatic dunnage adequately secured to prevent displacement may be used when 12 in. or less of lengthwise void remains in the car. Minimum of two bags to be placed upright or crosswise between buffer material. Minimum of two 1/4 in. hardboard sheets extending to height and width of load to be placed each side of bag. Bags to extend 1 in. from floor of car to top of load. Bags to be inflated initially to 8 psi. Bags must be minimum six-ply. Bags may not be used in tandem (inflated face to inflated face). Bag placement will be between piles nearest the midpoint between bulkheads. Protective cover, if used, must be adequately secured to prevent dislodgement.
4. Packages may not exceed width of car deck.
5. MDF is an acronym for medium density fiberboard, a wood-composite-based sheet product, and is a recognized industry term. Where lumber securement items in this figure refer to particleboard, MDF product may be substituted. MDF product, if loaded or used with this figure, must be uncoated.

Reference the General Rules in Section 1 of the *Open Top Loading Rules Manual* for additional details.

IMPLEMENTED 11/2015

Fig. 37 (Rev. 11/15)
(New 03/01)

PANEL PRODUCTS, PACKAGED 6 FT LONG OR OVER, 40 IN. HIGH OR LESS—CENTER A-FRAME FLATCARS, WITH CABLE TIE-DOWNS

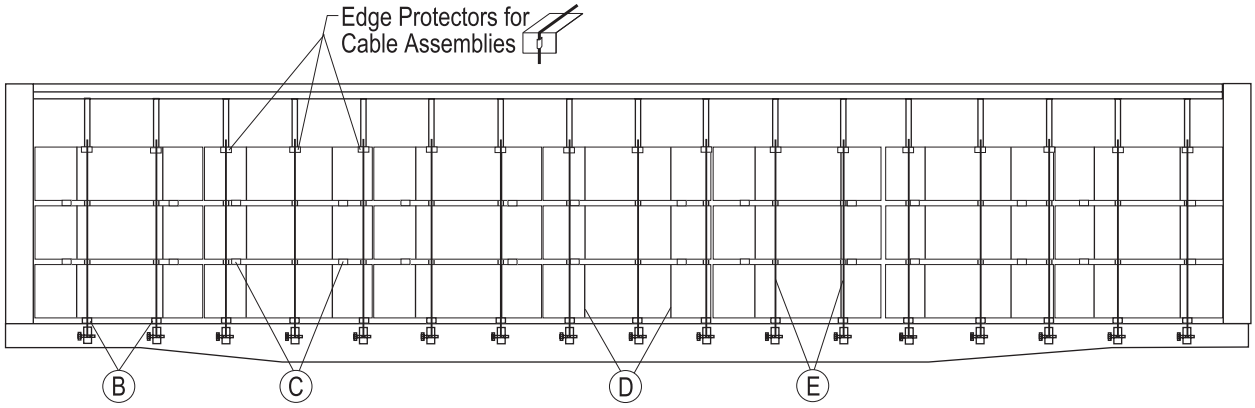

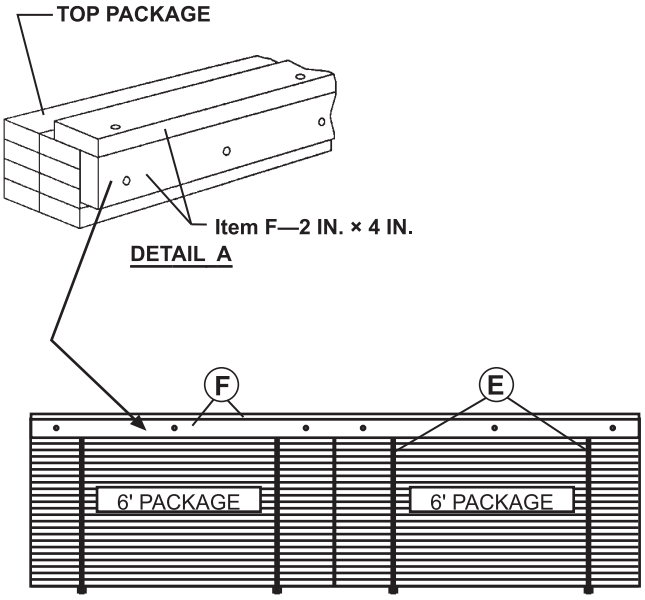

TOP LAYER UNIT
SKETCH 1

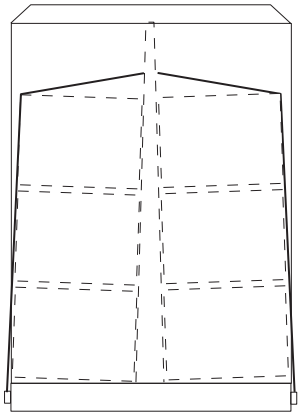

END VIEW

Item	No. of Pcs.	Description
A		Vacant
B	Minimum 2 per package.	Bearing pieces: cars are equipped with permanent floor bearing pieces wedged at 90° to A-frame. Refer to Alternate Item B for cars not equipped with permanent floor bearing pieces.
C	Minimum 2 per package.	Separators: lumber, 2 in. × 3 in. minimum, of one piece, and preferably rough. Height must not exceed width. Length must be equal to width of package. All separators must be in one piece. Locate approximately 18 in. from each end of package. Separators may be secured to top or bottom of packages with Item D package ties. When attached to top of packages in the top layer of load, each separator must be secured to the package with one 10-D nail. (Use of separators is optional.)
D	Minimum 2 per package.	Package bands: minimum 5/8 in. × .035 in. polyester strapping. If load contains no void space, 5/8 in. × .020 in. high tension bands may be used. Locate one tie about one-fourth the length from each end of package.

IMPLEMENTED 11/2015

Fig. 37 (Rev. 11/15) (Concluded)
(New 03/01)

PANEL PRODUCTS, PACKAGED 6 FT LONG OR OVER, 40 IN. HIGH OR LESS—CENTER A-FRAME FLATCARS, WITH CABLE TIE-DOWNS

Item	No. of Pcs.	Description
E	2 per top package 10 ft long or less. 3 per top package over 10 ft long.	Cables: 3/8-in. diameter, 8,800-lb minimum breaking strength. Cable assemblies must be equipped with edge protectors. Winch assemblies must be equipped with a device to maintain tension. Prior to tightening, there must be a minimum of 2 1/2 wraps of cable around the winch drum. When practical, all cables must be used and must be free of kinks and tangles. Tension to be applied with the use of an 18-in. bar or 3/8-in. ratchet. Cables are to be secured to A-frame in slot nearest to top of package. See Note 9.
F	1 cap per unit.	Top corner cap: each cap assembly to consist of two pieces lumber, minimum 2 in. × 4 in., length equal to length of unit package. Locate one piece along the top outside edge of one unit (comprised of two end-to-end packages) in top layer, positioning the 4-in. width vertically. Make flush with top and ends of packages. Locate second piece along top of packages and flush with the outside edge of the first piece, forming a corner angle over unit. Secure top piece to edge of lower piece with 16-D nails spaced approximately 12 in. apart as shown in drawings. Any top-layer package that is not fully protected by two Item E cables must be part of unit comprised of two packages, each protected by Item F. See Sketch 1 and Detail A.
Alternate Item B for Cars Not Equipped with Permanent Bearing Pieces		
Alt B	Minimum 2 per package 8 ft long. Add 1 for each additional 4 ft.	Bearing pieces: lumber, 2 in. × 3 in. minimum, of one piece, and preferably rough. Width must be at least 1 in. greater than height, and the length equal to width of bottom package. Locate approximately 18 in. to 24 in. from each end of package with remaining pieces equally spaced. May be attached to package with Item D package bands.

Notes and Additional Requirements:

1. Voids should be as near the center of load as practicable.
2. End packages must be located against bulkheads.
3. The packages must be placed tight against the A-frame to prevent loosening of cables.
4. Height of load must not exceed height of A-frame.
5. The Open Top Loading Rules do not provide for protective covering. Protective covering, if used, must be applied consistent with the practice of the industry.
6. Deck of car must be free of debris, snow, or ice before loading.
7. Packages in bottom layer less than 8 ft in length must be loaded on a riserless car.
8. Packages in top layer less than 8 ft in length must have corner caps.
9. In lieu of Item F top corner caps, top packages that do not accommodate two Item H cables may be unitized by one Type 1A, Grade 7 strap encircling packages on both sides of the car and secured with an approved ladder buckle. Straps shall be positioned 1 ft from the ends of the packages they are unitizing.

Reference the General Rules in Section 1 of the *Open Top Loading Rules Manual* for additional details.

IMPLEMENTED 11/2015

Fig. 38 (New 03/02)

OSB, SIDING, LAP-TYPE, PAINTED AND PACKAGED, 4 FT WIDE, LENGTHWISE ON CAR—BULKHEAD FLATCARS

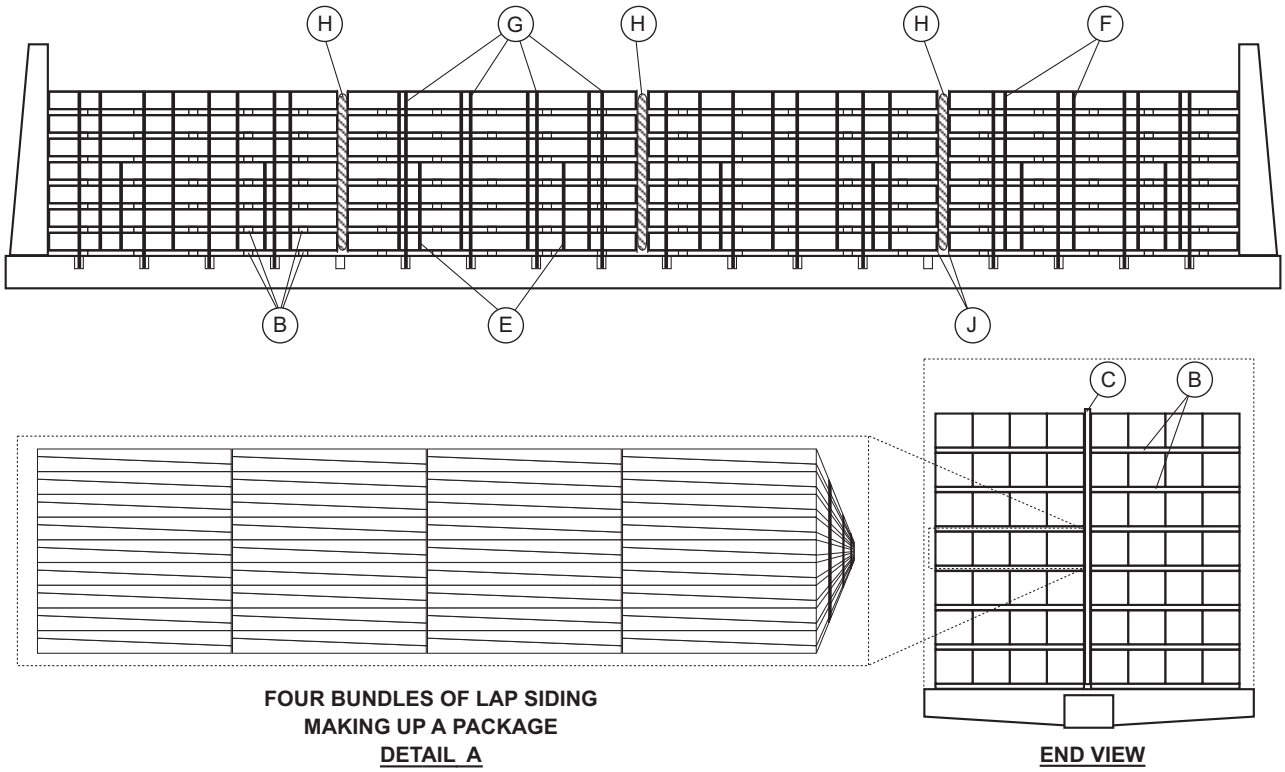

Item	No. of Pcs.	Description
A		Vacant.
B	Minimum 7 per package for product less than 1 in. thick. Minimum 5 per package for product 1 in. thick and greater.	Attached dunnage: lumber, minimum 2 in. × 4 in., width must be greater than height. Length must be equal to width of package. Locate one approximately 24 in. from each end of package with others equally spaced between. Encircle each with one Item D band.
C	3 per pile.	Vertical load stabilizers: lumber or OSB, minimum 1 1/2 in. × 4 in., in one piece and free from decay and strength-impairing knots. Length must extend from the top of load to the bottom of the first layer, but not below. Secure each to the attached dunnage, Items B, with a minimum of four nails at least 2 in. longer than the thickness of stabilizers. Stabilizers are to be distributed equally over the length of the pile.
D	1 per each Item B.	Package bands: 3/4 in. × .025 in. high tension bands to encircle entire package including Item B. (Not shown on drawing.)
E	2 per pile.	Unitizing bands: 1 1/4 in. × .029 in. high tension bands. Bind all side-by-side packages in bottom four layers of each pile. Locate one band approximately 1/3 the length of the pile from each end.
F	4 per pile.	Encircling bands: 1 1/4 in. × .029 in. high tension bands. Encircle all packages in the same pile. Locate one band approximately 1/4 the length of the pile from each end with others equally spaced between.
G	4 per pile.	Securement bands: 1 1/4 in. × .029 in. high tension bands. Secure to lading strap anchors, stake pockets, or, if car is so equipped, to the constant-tensioning devices. May be substituted with polyester web strap if car is so equipped; all straps are to be used.